ED SERIES ELECTRONIC TORQUE WRENCH

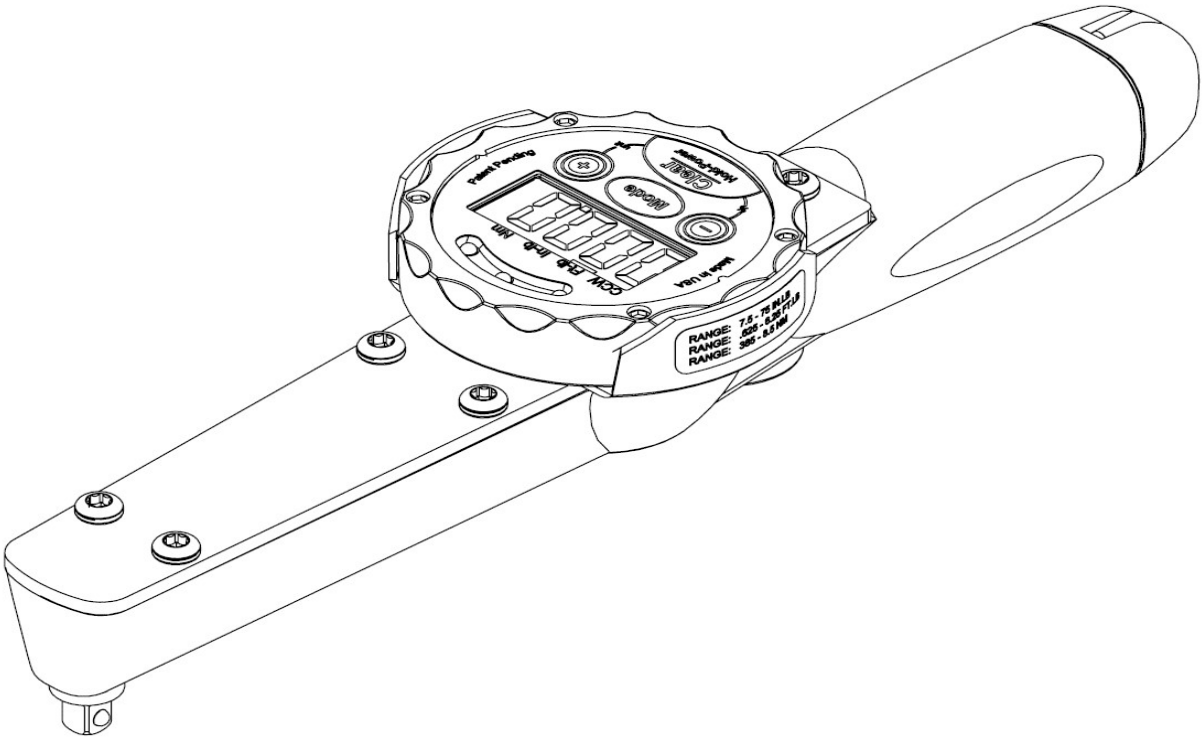

Jetco Torque Tools
www.itorque.com
Thank you for buying a JETCO product
Document No: INSM001
Rev 12.10.18

OWNER'S MANUAL

INTRODUCTION

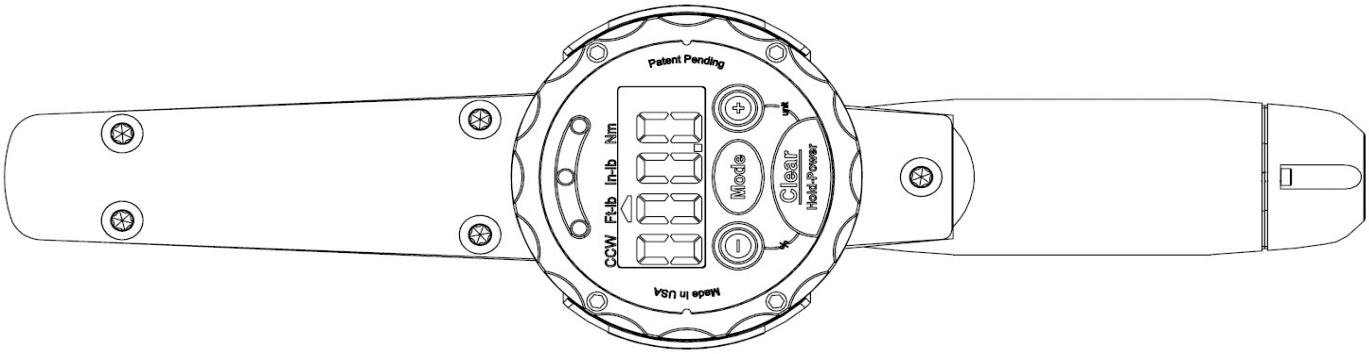

Congratulations! You have purchased the most accurate, durable and easy to use electronic torque wrench on the market. You will find this torque wrench can compete with other products costing 4 times as much. This wrench was made to be used as a tool and not as a high cost, fragile display that only a quality control person could figure out. Turn it on and apply the torque. It's that easy!

A significant advantage this wrench has over other more expensive wrenches is that it samples torque fast enough so you do not need to pull slowly on the wrench. Other wrenches will not capture the actual peak torque when you pull on the wrench at normal speeds. Simply put, this wrench is a "Hot Rod". It samples torque at a blazing rate of over 2,500 samples per second compared to as low as 250 per second from the competition.

Did you know with conventional mechanical torque wrenches (clickers) you can easily over torque the fastener by as much as 100%! This is because even though the wrench may have "clicked" at the target torque setting the user probably did not stop pushing on the wrench until much higher torque was achieved. There is no way of knowing what the user actually torqued the fastener to.

With this new torque wrench, not only will you see exactly what torque you applied, you will be shown a red light and buzzer if you over torque the fastener. This results in more accurate torquing and less problems with broken bolts, warped heads, warped brake rotors etc..

Choose the power option and you have a wrench that will output data to a computer and has internal rechargeable batteries.

For additional features, visit our website at www.itorque.com.

Thank you for choosing Jetco Torque Tools!

SAFETY WARNINGS

WARNING
Before operating this tool, please read and follow all safety precautions found in this owner's manual. Improper and unsafe use of this tool can result in serious bodily injury! Please keep this manual available for future reference.

- Always wear safety glasses when operating any torque tool.
- Always use the proper range torque wrench for the application. Over torque may result in damage or failure of the tool which can result in personal injury. Under torque may result in an incorrectly tightened fastener that could loosen resulting in failure at a later date.
- Do not use tools for jobs which they are not intended for. Never use a torque wrench to loosen a bolt/screw.
- Never apply torque in a situation where tool breakage may result in a fall or slip resulting in personal injury. Pulling on the wrench as opposed to pushing may help in this situation.
- Always replace worn or rounded fasteners prior to applying torque. Slippage may occur resulting in personal injury.
- Examine each tool for damage prior to use and never use if damaged.
- When not in use, the tool should be stored in a dry place.
- Keep handles dry, clean, and free from oil and grease to prevent slippage.

GENERAL DISCLAIMER

While the information in this document has been presented with all due care, Jetco Torque Tools LLC does not warrant or represent that the information is free from errors or omission. This information is made available on the understanding that Jetco Torque Tools LLC shall have no liability to the user for any loss, damage, cost or expense incurred or arising by any person using or relying on the information and whether caused by reason of any error, negligent act, omission or misrepresentation in the information or otherwise. Jetco Torque Tools LLC reserves the right to change information without notice.

OPERATION

INSTALLING BATTERIES

See Figure 1

■ Wrenches up to 50ft-lb take a battery pack containing 4x AAA non-rechargeable batteries. All other wrenches take a 9V battery.

■ To install a battery pack, remove the 2 screws that hold the end cap and insert the battery pack with the spring contacts on the top as shown.

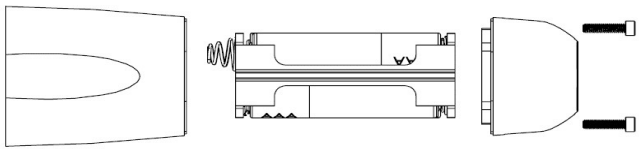

Fig. 1

WARNING:
Do not install non-rechargeable batteries in Power wrenches ("-P" and "-USB" models) or damage will occur.
Do not overtighten screws.

NOTE:

■ "BATT" icon will turn on when the batteries are low. When batteries are critically low the wrench will not turn on.

■ Battery pack must be inserted in the correct orientation to make contact with the circuit board inside.

■ Models with the "Power" Option will include rechargeable batteries. Do not install non-rechargeable batteries in these models or damage will occur.

■ Battery life is dependant on battery quality and how often the lights and buzzer are used. Typical life is up to 50 hours. Use high quality lithium batteries for longest life.

POWER ON

See Figure 2

■ To turn on, press and hold the power button.

Power Button

Fig. 2

NOTE:

■ If the wrench is not used for approximately 30 minutes it will automatically shut off.

■ Do not turn on the wrench while torque is applied.

■ If the wrench comes on and then shuts off immediately the batteries are probably low.

■ All previous stored settings (units, target, value, taget %) are stored even when the power is off and the batteries are out of the wrench.

ROTATING THE DISPLAY

See Figure 3

■ For a better viewing angle, rotate the display by holding on to the bezel and turning it clockwise or counter-clockwise.

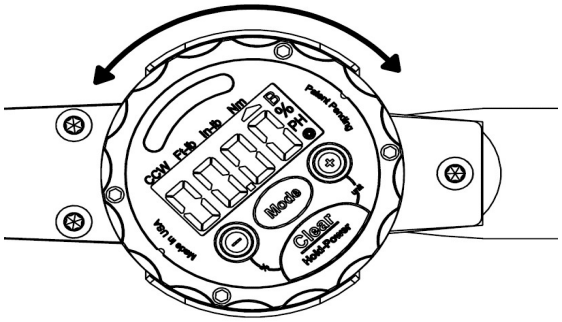

Fig. 3

OPERATION

SET TARGET TORQUE

See Figure 4

■ Press and hold the + target key to increase the target value and - target key to decrease the target value.

NOTE:

■ Press either target key once to see the current value without making any changes. The target vlaue will show for 3 seconds.

■ The longer you press and hold the target key the faster the display will change.

CHANGING UNITS

See Figure 4

■ With the wrench on, press and hold the power/clear button for no more than 3 seconds. (holding it for more then 3 seconds will turn off the wrench). Then press the Target + button to change units.

ATTENTION:
For security, it takes two key presses to change the units.

NOTE:

■ When you change the units, the target setting will convert to the new units (makes a great torque conversion calculator)

■ The units selected will become the default units when the wrench is turned off and on again.

■ Units can be set to ft-lb, in-lb, and N-m as well as in-oz and dN-m in some models.

■ The arrow will indicate what unit is being used

ZERO/TARE FUNCTION

See Figure 2

■ Press and hold the clear button for 1.5 seconds.

■ Display will show " ---- " indicating the wrench has taken a new zero point (zero tare).

APPLYING TORQUE

See Figure 4

■ The YELLOW LED on the display will turn on to notify the user the applied torque is approaching the target value. This will occur at approximately 85% of the target value.

■ The GREEN LED will turn on when the applied torque is within tolerance of the target value. Default tolerance is ±1%.

■ The RED LED will turn on when the applied torque has exceeded the maximum tolerance.

NOTE:

■ There are three ways the user can determine when the target torque has been reached:

1. Looking directly at the LCD
2. Looking at the LED lights
3. Listening for the buzzer

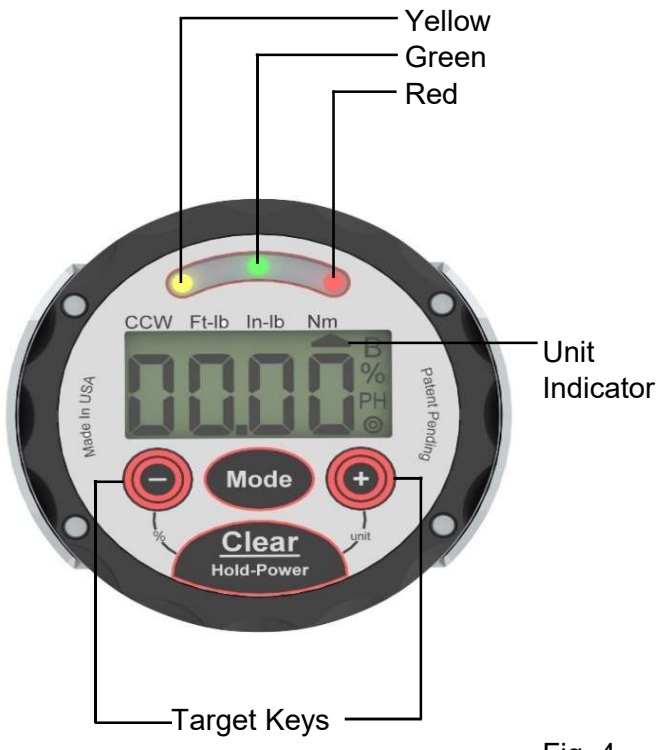

Fig. 4

OPERATION

CHANGING TORQUE DIRECTION

■ To maximize accuracy, JETCO recommends that the user undergo the following procedure whenever switching torque direction (from CW to CCW or vice versa):

■ Before switching directions, load the torque wrench to full scale 3 times in the direction you wish to use the wrench in. If the wrench is currently being used in the CW direction and the user wishes to switch to CCW, load the wrench 3 times in the CCW direction.

■ Zero/Tare the wrench.

NOTE:

See Figure 5

■ An arrow will be visible under "CCW" when the wrench detects the torque being applied is in the counter-clockwise direction.

■ Refer to the calibration procedure for more information on zero/tare.

Fig. 5

PEAK HOLD AND TRACK MODE

See Figure 4

■ When applying torque in PEAK HOLD mode, the wrench will detect the highest torque applied and display it on the screen.

■ The screen will show "PH" when in PEAK HOLD mode.

■ In TRACK mode, the wrench will display the torque reading on the screen in real time.

■ To switch between PEAK HOLD and TRACK mode press the mode button.

CHANGING THE PASS/FAIL ZONE

See Figure 4

■ The default target torque zone the wrench is set to is ±1%. This can be changed anywhere between 1-10% or it can be turned off.

■ To change or turn off the pass/fail zone, with the wrench on hold the power button for no more than 3 seconds (holding it for more then 3 seconds will turn off the wrench).

■ Press the Target " - " key. Keep pressing the target " - " key until the desired value is shown.

OPERATION OF POWER WRENCHES

POWER WRENCHES

■ Power wrenches (-P and -USB Models) are able to:

1. Charge batteries while using the wrench
2. Use the wrench on external power (no batteries)
3. Send torque information to a printer, computer, or data logger.
4. Control the wrench remotely with a serial "open source" command.

RS232 KIT

See Figure 6 & 7

■ The following components are included with every power wrench equipped with the RS232 kit (-P Models):

1. 110 Volt Transformer
2. RS232/Power Adapter (DB9 Serial Port)
3. Data cable (standard 6 wire RJ11 cable)
4. Rechargeable AAA Batteries

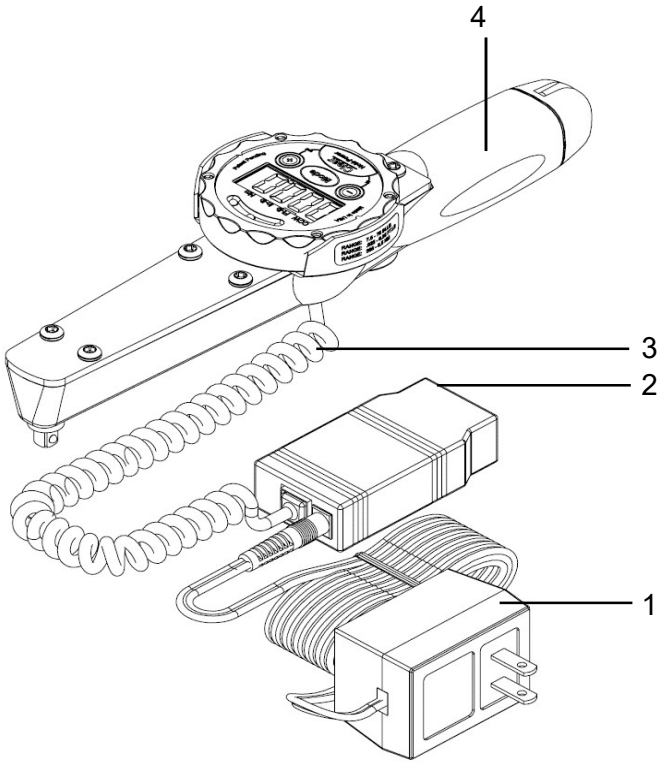

Fig. 6

USB KIT

See Figure 8

■ The following components are included with every power wrench equipped with the USB kit (-USB Models):

1. 110V / 5V Transformer
2. USB Cable
3. Data cable (standard 6 wire RJ11 cable)
4. USB Adapter
5. Rechargeable AAA Batteries

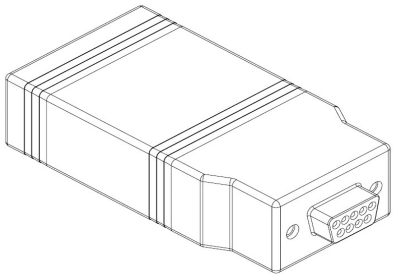

DB9 Serial Port for data transfer included with "-P" Models

Fig. 7

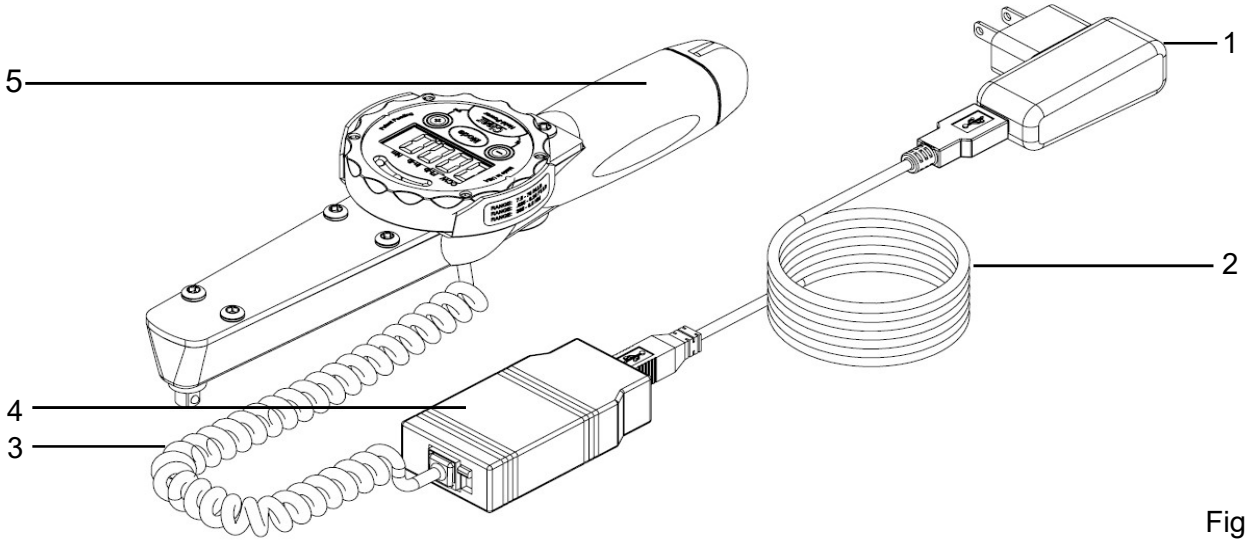

Fig. 8

OPERATION OF POWER WRENCHES

SENDING DATA TO A COMPUTER

NOTE:

■ To send data to a computer, the computer must be equipped with software capable of capturing the data sent by the wrench.

■ The following are some programs that are recommended for this task:

- HyperTerminal (Included in some versions of Windows)
- DATASNIP (free download)
- Winwedge or Winwedge Pro

Please contact JETCO if you have any questions regarding the use of software.

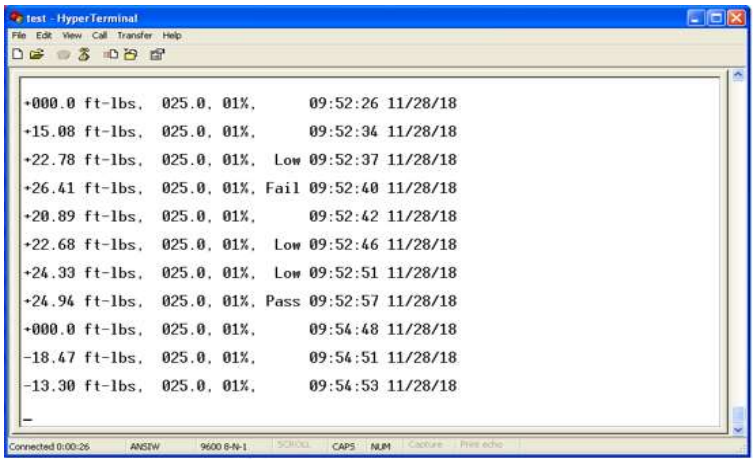

Fig. 9

SENDING DATA TO A COMPUTER

■ Plug the RS232 adapter into a 9 pin serial port on your computer or if equipped with a USB cable, plug it into a USB port on your computer.

■ *RS232 Kit only:* Plug in the 110V transformer into a wall outlet.

■ Connect the data/power cable to the wrench.

■ Turn on the wrench and set the mode to PEAK MODE.

■ Press the CLEAR key to send data to the computer.

NOTE:

See Figure 9 & 10

■ The following information will be sent automatically:

- Torque value (+ for CW, - for CCW)
- Units
- Target Torque Setting
- Target Zone Setting (%)
- Low/Pass/Fail Condition

■ Data is sent in standard ASCII text format.

Communication Protocal:

9600 Bps,8 data bits, no parity, 1 stop bit

■ To send information directly to a spreadsheet or word processor, the user can copy and paste, save and import text files (from Hyperterminal) or download a "wedge" program that will send data directly. DATASNIP is recommended, visit: www.priority1design.com.au/datasnip.html to download a free version of DATASNIP.

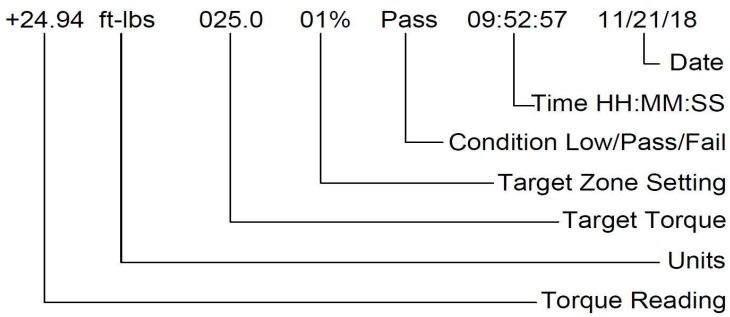

Fig. 10

CHARGING BATTERIES

■ Connect the data/power cable to the wrench.

■ *RS232 Kit only:* Connect the 110V transformer to a wall outlet and batteries will begin to charge.

■ *USB Kit only:* Connect the USB cable to the USB wall transformer or USB port on a computer and batteries will begin to charge.

WARNING:

Do not install non-rechargeable batteries in Power wrenches ("-P" and "-USB" models) or damage will occur.

NOTE:

■ The wrench can be used while charging batteries or on external power without batteries.

■ Batteries can be charged while sending data to a computer.

LIST OF ASCII COMMANDS

Command	Description	Parameters	Exmaple
LBF	Change display units to foot pounds	CR at end	Command: LBF<CR> Response: OK
LBS	Change display units to inch pounds	CR at end	Command: LBS<CR> Response: OK
NMT	Change display units to Newton Meters	CR at end	Command: NMT<CR> Response: OK
MMV Or '?'	Return current torque value	CR at end or ? CR at end If '?' alone, no CR is needed	Command: MMV?<CR> or MMV<CR> or ?<CR> Response: Torque value
DMM	Return torque memory contents	CR at end or ? CR at end	Command: DMM?<CR> or DMM<CR> Response: All saved torque readings
RMM	Clear torque memory contents	CR at end or ? CR at end	Command: RMM<CR> Response: OK
RDP	Clear display and peak	CR at end	Command: RDP<CR> Response: OK
PER	Get / Set Setpoint Percent	Get: CR at end or ? CR at end Set: PER,X or XX, = 0 to 10 %, 0 = OFF	Get: Command: PER?<CR> or PER<CR> Response: Setpoint Percent Value Set: Command: PER,5<CR> = Set Setpoint % to 5% Response: OK

LIST OF ASCII COMMANDS

Command	Description	Parameters	Exmaple
SET	Get / Set Setpoint	Get: CR at end or ? CR at end Set: SET,X or XXXXX	Get: Command: SET?<CR> or SET<CR> Response: Setpoint Value Set: Command: SET,50.0<CR> = Set Setpoint to 50.0 Response: OK
SEA	Get / Set Angle Setpoint	Get: CR at end or ? CR at end Set: SEA,X or XXX, = 0 to 360, 0 = OFF	Get: Command: SEA?<CR> or SEA <CR> Response: Angle Setpoint Value Set: Command: SEA,5<CR> = Set Angle Setpoint to 5 degrees Response: OK
BAT	Get Battery Level	CR at end or ? CR at end	Command: BAT<CR> Response: Battery Level in percent full.
SWO	Get / Set Auto Off Time	Get: CR at end or ? CR at end Set: SWO,X or XX	Get: Command: SWO?<CR> or SWO<CR> Response: Auto off time in minutes Set: Command: SWO,10<CR> = Set Auto off time to 10 minutes. Range 1 to 30 minutes. Response: OK
SFP	Get / Set First Peak A/D Count	Get: CR at end or ? CR at end Set: SFP,X or XX or XXX	Get: Command: SFP?<CR> or SFP <CR> Response: First Peak setpoint in A/D counts Set: Command: SFP,300<CR> = Set First Peak setpoint to 300 counts. Range 1 to 999 counts. Response: OK

LIST OF ASCII COMMANDS

Command	Description	Parameters	Exmaple
VER	Get Version	Get: CR at end or ? CR at end	Command: VER<CR> Response: Software Version Number
DPK	Set display peak torque mode	Get: CR at end or ? CR at end	Command: DPK <CR> Response: Software Version Number
DAV	Set display average torque mode	Get: CR at end or ? CR at end	Command: DAV <CR> Response: Software Version Number
PFP	Power up in first peak mode.	CR at end	Command: PFP <CR> Response: OK
PLS	Power up in last saved mode.	CR at end	Command: PLS <CR> Response: OK
USR	Get / Set User Wrench ID	Get: CR at end or ? CR at end Set: USR,(User ID) CR at end	Get: Command: USR?<CR> or SWO<CR> Response: User set ID, 24 characters maximum. Set: Command: USR,123456789012345678901234<CR> = Set user ID to '123456789012345678901234. Response: OK Please note any spaces after the comma will be included.

LIST OF ASCII COMMANDS

Command	Description	Parameters	Exmaple
MFG	Get Manufacturer Serial Number	Get: CR at end or ? CR at end	Command: MFG?<CR> or MFG<CR> Response: 12 character serial number in the format: YYYYMMDDx123 where: YYYY = year MM = month DD = day x = firmware burning station 123 = serial number of device burned that day This number is loaded by the firmware burning station only. Log files are kept on the firmware burner with information on the electronics. The log file name will be YYYYMMDD, indicating the present date, and a new file will be started each day.

LIST OF ASCII COMMANDS

Command	Description	Parameters	Exmaple
ENK	Enable / Disable Keypresses. Stores setting in EEPROM	Get: CR at end or ? CR at end Set: KEY,1,1,1,1 CR at end Position 1 = Units Change, 1 = Enabled, 0 = Disabled Position 2 = Mode Change Position 3 = Target Change Position 4 = Target Tolerance Change	Command: ENK,1,0,1,1<CR> Enables: Units Changes Target Changes Target Tolerance Changes Disables: Mode Changes Response: OK
DTC	Disable target changes. Allows viewing only.	CR at end	Command: DTC <CR> Response: OK
ETC	Enable target changes.	CR at end	Command: ETC <CR> Response: OK
RFS	Return calibration full scale torque	Get: CR at end or ? CR at end	Command: RFS?<CR> or CLP<CR> Response: Calibration full scale torque in ASCII
CLP	Return current peak CW torque value	Get: CR at end or ? CR at end	Command: CLP?<CR> or CLP<CR> Response: Current peak CW torque value
ALP	Return current peak CCW torque value	Get: CR at end or ? CR at end	Command: ALP?<CR> or ALP<CR> Response: Current peak CCW torque value
ENB	Enable Options Changes	CR at end	Command: ENB<CR> Response: OK

LIST OF ASCII COMMANDS

Command	Description	Parameters	Exmaple
DIS	Disable Options Changes	CR at end	Command: DIS<CR> Response: OK
ENP	Enable Setpoint Presets	CR at end	Command: ENP <CR> Response: OK
DIP	Disable Setpoint Presets	CR at end	Command: DIP <CR> Response: OK
PRE	Get / Set Setpoint Preset	Get: PRE,Y CR at end or ? CR at end Y = setpoint number 1 through 8 Set: PRE,Y,X or PRE,Y,XXXXX	Get: Command: PRE,4?<CR> or PRE,4<CR> Response: Setpoint Preset #4 Value Set: Command: PRE,2,50.0<CR> = Set Setpoint Preset #2 to 50.0 Response: OK
RTC	Get / Set Real Time Clock (Time and Date)	Get: RTC CR at end or ? CR at end Set: RTC,HH:MM:SS MM/DD/YY	Get: Command: RTC?<CR> or RTC<CR> Response: HH:MM:SS MM/DD/YY Set: Command: RTC,12:34:56 10/20/15<CR> = Set Real Time Clock to 12:34:56, October 20th, 2015 Response: OK
RTT	Get / Set Real Time Clock (Time only)	Get: RTT CR at end or ? CR at end Set: RTT, HH:MM:SS	Get: Command: RTT?<CR> or RTT <CR> Response: HH:MM:SS Set: Command: RTT,12:34:56<CR> = Set Real Time Clock to 12:34:56 Response: OK

LIST OF ASCII COMMANDS

Command	Description	Parameters	Exmaple
RTD	Get / Set Real Time Clock (Date only)	Get: RTD CR at end or ? CR at end Set: RTD,MM/DD/YY	Get: Command: RTD?<CR> or RTD <CR> Response: HH:MM:SS Set: Command: RTD,10/20/15<CR> = Set Real Time Clock Date to October 20th, 2015 Response: OK
ADT	Return the A/D torque reading	CR at end	Command: ADT <CR> Response: Curre untared A/D torque reading
ADA	Return the A/D angle reading	CR at end	Command: ADA <CR> Response: Current raw A/D angle sensor reading
RST	Reset the electronics	CR at end	Command: RST <CR> Electronics is reset back to powerup state. Response: none

Torque response format (MMV command and DMM command):

Character count, 60 message characters plus carriage return / linefeed = 62 maximum:

```
         111111111122222222223333333333444444444455555555556
123456789012345678901234567890123456789012345678901234567890
|         |         ||         ||       ||     |            |         |     |      |      |      |
+139.7 ft-lbs, 185.0, OFF, 45 degrees Pass HH:MM:SS MM/DD/YY
+ 1669 in-lbs,  2220, 05%, 45 degrees Low  HH:MM:SS MM/DD/YY
+265.7 Nm    , 250.9, 02%, 45 degrees High HH:MM:SS MM/DD/YY
+182.4 ft-lbs, 185.0, 02%, 45 degrees Pass HH:MM:SS MM/DD/YY
```

CALIBRATION PROCEDURE

Jetco Electronic Torque Wrench (REVO/EX and Electronic Dial Type) Calibration Procedures

You must have the proper equipment to calibrate the electronic torque wrench.
Equipment required:

1. Certified NIST traceable torque tester with an accuracy of 0.5% or better
2. Loading means: Weights or torque loader.

The wrench is calibrated by loading it to 8 predetermined points (three clockwise and three coutner-clockwise plus zero in each direction). The calibration must be done in the equivalent primary units of the wrench (in-lb or ft-lb).
For example, to calibrate a 250 ft-lb wrench you must have the ability to accurately apply 25.00 ft-lb (10% of full scale), 125.0 ft-lb (50%) and 250.0 ft-lb (100%) in both the cw and ccw direction.

Test Accuracy Procedure:

1. Turn the wrench on with NO torque applied (not installed in the loader and no hanging on a transducer). Put the wrench in TRACK mode by holding the power button and then press the tolerance + key one time. Each time you press the tolerance + key, while holding the power button, you will toggle between peak hold (shown by PH) on the display and track mode. On the electronic dial type wrenches press the Mode key to enter track mode.
2. Testing manually (without a loader): Attach the wrench to the transducer horizontally (parallel to the ground) with drive pointing away from you and installed in the transducer. Put the torque tester in track mode. Now, when you apply torque to the handle of the wrench the readings on the wrench should correspond to the readings on the tester within the specified accuracy (wrench accuracy plus tester accuracy). You need to apply the torque to the handle with weights using a strap or cable to suspend the weights from the CENTER of the handle. Since you are using the accuracy of the tester to test the wrenches you do not need to worry about using certified weights. The weights are only used to apply a steady force on the handle during testing.
3. When going from clockwise to counterclockwise always load the wrench to full scale three times prior to the test. This “shifts” the zero to the opposite direction as a result of hysteresis (hysteresis is natural phenomenon which occurs in material).
4. Note the readings and determine the accuracy. If the wrench is out of tolerance re-calibrate per the procedure below. Be sure to take into account the accuracy of your tester when determining the accuracy.

Calibration Procedure:

1. To enter calibration mode with a REVO/EX series do the following: With the wrench OFF and NO torque applied, press the Tolerance plus (+) key and the Power/Clear key at the same time (this starts the wrench in calibration mode). To enter calibration mode with the Electronic Dial series press the MODE button and then the power key. If done properly the wrench will turn on showing: “ C000" for a moment. The wrench will then display “0”. Load the wrench to full scale three time in the CLOCKWISE direction. Remove the wrench from the tester and press the UNITS button to accept the zero torque calibration point.
   NOTE: Each calibration level requires you to apply the correct torque and press the UNITS key (REVO/EX series) or MODE key (Electronic Dial Series) to go on to the next calibration step. If you make a mistake you must start over at step 1. When using weight to apply torque do not touch the weights until the wrench displays the next calibration point, there will be a short hesitation after pressing the UNITS key (REVO/EX series) or Mode key (Electronic Dial Series) to allow the weights to stabilize and for you to get your finger off of the keypad.
   IMPORTANT: you must always calibrate in the clockwise direction FIRST, then the counter-clockwise direction. When you press the UNITS key (REVO/EX series) or MODE key (Electronic Dial Series) to accept the torque input squeeze (pinch) the button from the back of the wrench so you do not deflect the wrench by pressing down on the key.

CALIBRATION PROCEDURE

2. The wrench will now show “C010”. Apply 10% of full scale to the wrench in the CW direction. If the wrench range is 250 ft-lb apply exactly 25.00 ft-lb (10% of full scale) squeeze the UNITS key to accept the 10% torque value. **IMPORTANT! After loading the desired torque and pressing the units key the tester will approximately 3 seconds to take a reading to allow the torque to stabilize and for you to remove your finger from the wrench, do not touch the wrench or go on to the next step until the wrench prompts you to do so. Make sure the weights are not swinging when you press the UNITS key (if you are suing weights to apply the force to the handle).**
3. Repeat above procedure for 50% and 100% clockwise torque values.
4. After completing the CW direction the tester will display “C000” **and the direction icon will point to the CCW**. Load the wrench to full scale three time in the COUNTER-CLOCKWISE direction. Remove the wrench from the tester and press the UNITS key (REV/EX Series) or MODE key (Electronic Dial Series) to accept the CCW zero calibration point.
5. The wrench will now show “C010”. This means apply 10% of full scale to the wrench (this time in the counter-clockwise direction). If the tester is a 250 ft-lb tester apply exactly -25 ft-lb (10% of full scale). With a stable 10% load press the UNITS key. **IMPORTANT! After loading the torque and pressing the units key the wrench will wait approximately 3 seconds to take a reading to allow the torque to stabilize, do not touch the tester, or go on to the next step until the tester prompts you to do so.**
6. Repeat 50% and 100% in the counter-clockwise direction.

After pressing the final UNITS key (REVO/EX series) or MODE key (Electronic Dial Series), at 100% of full scale in the counter-clockwise direction, the tester will start reading the torque in the track mode. The value should be correct. If calibration values were not entered correctly such that values input were significantly different than the original values the calibration will not be accepted and the factors will not change.

Retest the unit at all points.

Important Calibration Issues:

1. The calibration will only be as accurate as the accuracy of the torque applied at the calibration points.
2. When testing the wrench for accuracy, make sure you are in Track mode.
3. Make sure you load BOTH the tester and the wrench to full scale in the direction to be calibrated, then remove the wrench from the tester and zero BOTH the tester and the wrench.
4. Always apply the torque to the center of the rubber grip of the JH series.
5. If, after calibration, the wrench “sticks” on the full-scale value of the wrench you have done something wrong during calibration. The most common causes for this are: 1. You calibrated the wrench in the reverse order (calibrated the CCW direction first), or, 2. You went through the calibration without loading the wrench, or, 3. You missed a calibration point (pressed the units key when no load was applied.

INFORMATION

JETCO TORQUE TOOLS RECOMMENDED CALIBRATION INTERVAL

JETCO recommends calibration at 6 months to 1 year intervals, however, actual intervals are user dependent and can vary based on cycles, environment, tool use, criticality of the application and other factors. It is the user's responsibility to determine the best calibration interval for their torque tools.

ACCURACY STATEMENTS

The following is a list of tool accuracies by series. JETCO accuracies are based on Indicated Value which means that the tool is guaranteed to meet or exceed this accuracy level at the reading within the given range.

Dial Wrenches: +/- 4% (both directions) from 20-100% of range.
Electronic Dial Wrenches (ED series): +/- 1% (both directions) from 10-100% of range.
SuperDuty/Revo Electronic Wrenches: +/- 2% (both directions) from 10-100% of range.
TED series Torque Testers: +/-1% (both directions) from 10-100% of range.
TTS-2000 Torque Meter when used with:
In-Line transducers: +/- .5% (both directions) from 10-100% of range.
Bench Mount Transducers: +/- .25% (both directions) from 10-100% of range.
Pre-set click wrenches: +/- 4% Clockwise and +/- 6% counterclockwise.
Micrometer click wrenches: +/- 4% Clockwise and +/- 6% counterclockwise.

ZERO/TARE FOR WRENCHES MANUFACTURED PRIOR TO 11/1/2016

If the wrench/tester serial number has a " * " symbol laser marked as part of the serial number it was manufactured after 11/1/2016 and can be zeroed/tared as described in this manual. Wrenches without the " * " symbol in the serial number are manufactured prior to 11/1/2016 and require that the wrench be turned off first and then on to zero/tare the display (for example when going from the clockwise (CW) to counter-clockwise (CCW) direction).