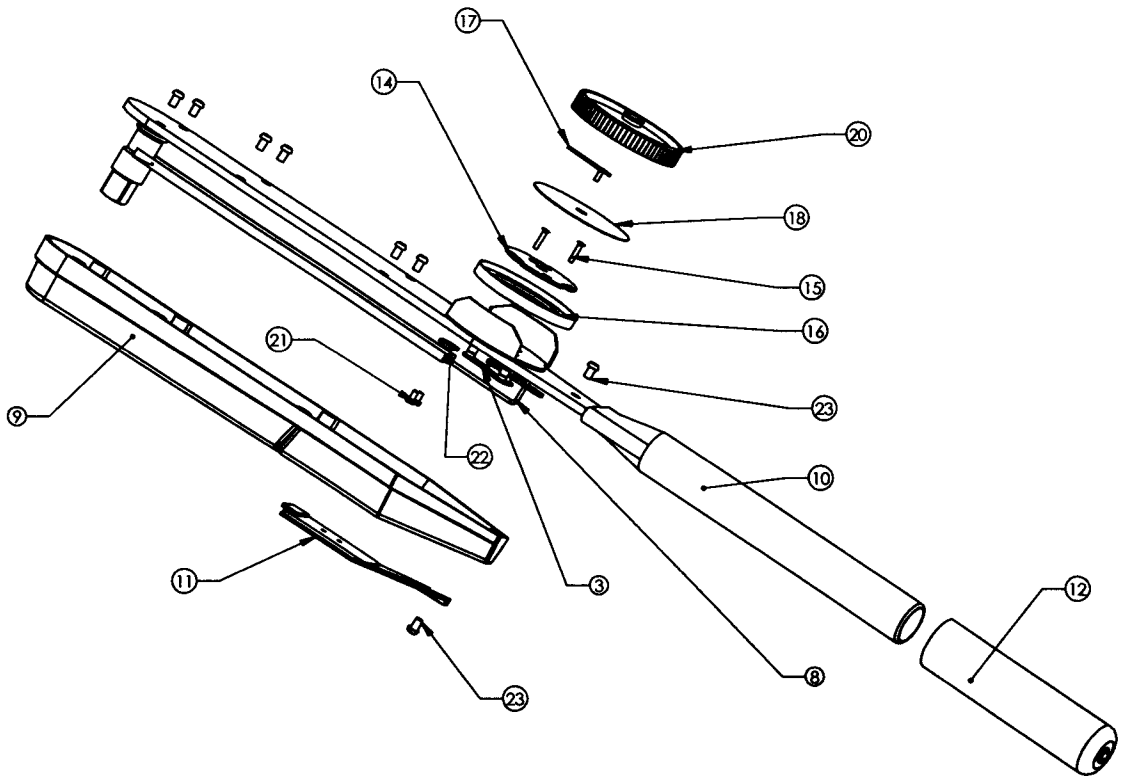

Item	Part Number	Qty	Description
3	1730	1	Jewel Movement
8	81-0071	1	Push Rod
9	38-0011	1	Housing, D3
10			Select Range below
	38-0016	1	Top Plate Assy 175 ft.-lb.
	38-0017	1	Top Plate Assy 250 ft.-lb.
11	81-0103	1	Cover, Calibration D3
12	81-0111	1	Grip, D3
14	81-0073	1	Shell, Fixed
15	60-0016	1	Screw, Phil. Flt Hd.
16	81-0074	1	Shell, Follower
17	81-0095	1	Pointer Needle
18	81-0077	1	Scale, Dial (Specify model)
20	81-0072	1	Bezel, Memory Needle Assy
21	60-0006	2	Screw,Ch.Hd
22	81-0087	1	Clamp,Push Bar
23	60-0018	7	Screw, Phil. Pan Hd
24	52-0002	1	Case, RED, D3 (not shown)

JETCO, Duarte, CA

Spare Parts D3 Series

35-0005